RB-30-1 2-Stage

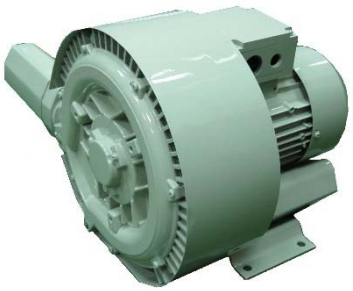

1. Casing is made of aluminum alloy and have excellent features on mechanic strength, durability, light weight and smooth exterior.
2. Impeller is made of aluminum alloy and have excellent features on mechanic strength, durability and light weight.
3. RB series ring compressors are designed to comply with the safety requirements of CE / c CSA us and have attained their type approval.
4. Design per customers requirement available.
5. Thermal protector is optional.

Meet CE Norm	89/336，73/23，EN60204-1，EN50081-2，EN50082-2		
Degree of protection	IP 54 (IP 55 optional)		
Insulation class	F class (155℃)		
Voltage range / Frequency	B	50Hz	200 ~ 240△ / 345 ~ 416Y V
		60Hz	208 ~ 275△ / 380 ~ 480Y V
	9	50Hz	1 Phase 104 ~ 127 / 208 ~ 254 V
		60Hz	
Installation	Any aspect（Except vertical mounting）.		

Blower 50Hz

Model	Phase	Voltage	Hz	Rated Output kW	Rated CurrentA(*1)	Max. Pressure mbar(*2)	Max. Airflow m^3/min	Noise Level dB(A)(*3)	Weight kg
RB30-1-5B0	3	200 ~ 240△ / 345 ~ 416Y	50	0.7	3.26~4.3 / 1.87~2.46	+240	1.3	67	15.7
RB30-1-6B0				0.8	3.2~3.5 / 1.86~2	+275			16.2
RB30-1-590	1	104 ~ 127 / 208 ~ 254		0.7	11.2~14.1 / 5.6~7.12	+240			16
RB30-1-690				0.8	12~14.2 / 6~7.2	+275			16.3

- Blower 60Hz

Model	Phase	Voltage	Hz	Rated Output kW	Rated CurrentA(*1)	Max. Pressure mbar(*2)	Max. Airflow m³/min	Noise Level dB(A)(*3)	Weight kg
RB30-1-5B0	3	208 ~ 275△ / 380 ~ 480Y	60	0.83	3.26~4.3 / 1.87~2.46	+250	1.6	69	15.7
RB30-1-6B0				0.9	3.2~3.5 / 1.86~2	+310			16.2
RB30-1-590	1	104 ~ 127 / 208 ~ 254		0.83	11.2~14.1 / 5.6~7.12	+250			16
RB30-1-690				0.9	12~14.2 / 6~7.2	+250			16.3

Remark 1. Under condition (*2), the test value.

Remark 2. Max. pressure for continuous operation permitted.

Remark 3. dB(A) value gets from 4 points & 1 meter distance test.

Remark 4. Can not be operated with closed intake & outlet, a suitable pressure-relief valve must be used.

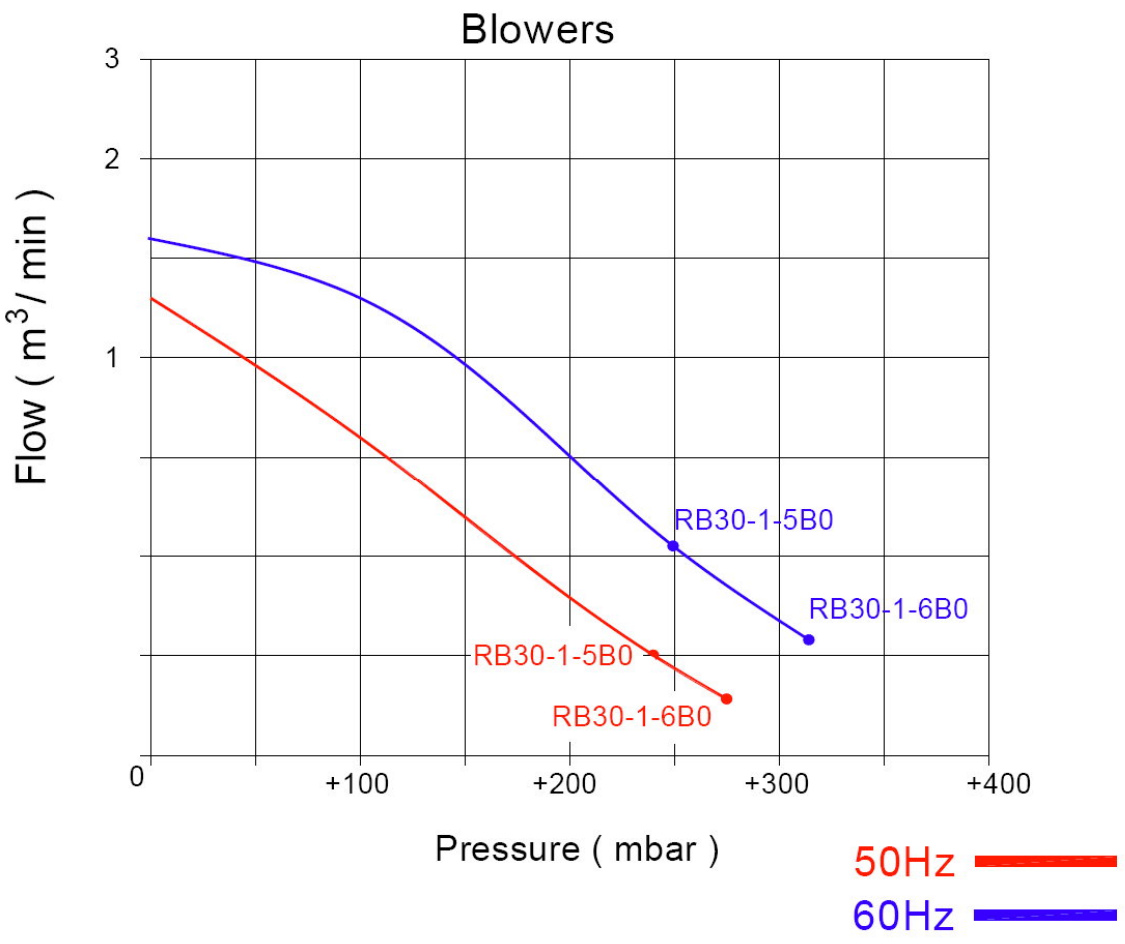

Vacuum 50Hz

Model	Phase	Voltage	Hz	Rated Output kW	Rated CurrentA(*1)	Max. Pressure mbar(*2)	Max. Airflow m³/min	Noise Level dB(A)(*3)	Weight kg
RB30-1-5B0	3	200 ~ 240△ / 345 ~ 416Y	50	0.7	3.04~4.23 / 1.75~2.42	-210	1.3	67	15.7
RB30-1-6B0				0.8	2.87~3.3 / 1.7~1.88	-220			16.2
RB30-1-590	1	104 ~ 127 / 208 ~ 254		0.7	10~13.9 / 5~7	-210			16
RB30-1-690				0.8	10.4~13.9 / 5.2~7	-225			16.3

Vacuum 60Hz

Model	Phase	Voltage	Hz	Rated Output kW	Rated CurrentA(*1)	Max. Pressure mbar(*2)	Max. Airflow m³/min	Noise Level dB(A)(*3)	Weight kg
RB30-1-5B0	3	208 ~ 275△ / 380 ~ 480Y	60	0.83	3.4~3.95 / 1.94~2.3	-250	1.6	69	15.7
RB30-1-6B0				0.9	3.5~3.48 / 1.98~2	-275			16.2
RB30-1-590	1	104 ~ 127 / 208 ~ 254		0.83	12.8~10.83 / 6.36~5.47	-250			16
RB30-1-690				0.9	12.8~10.83 / 6.36~5.47	-275			16.3

Remark 1. Under condition (*2), the test value.

Remark 2. Max. pressure for continuous operation permitted.

Remark 3. dB(A) value gets from 4 points & 1 meter distance test.

Remark 4. Can not be operated with closed intake & outlet, a suitable pressure-relief valve must be used.

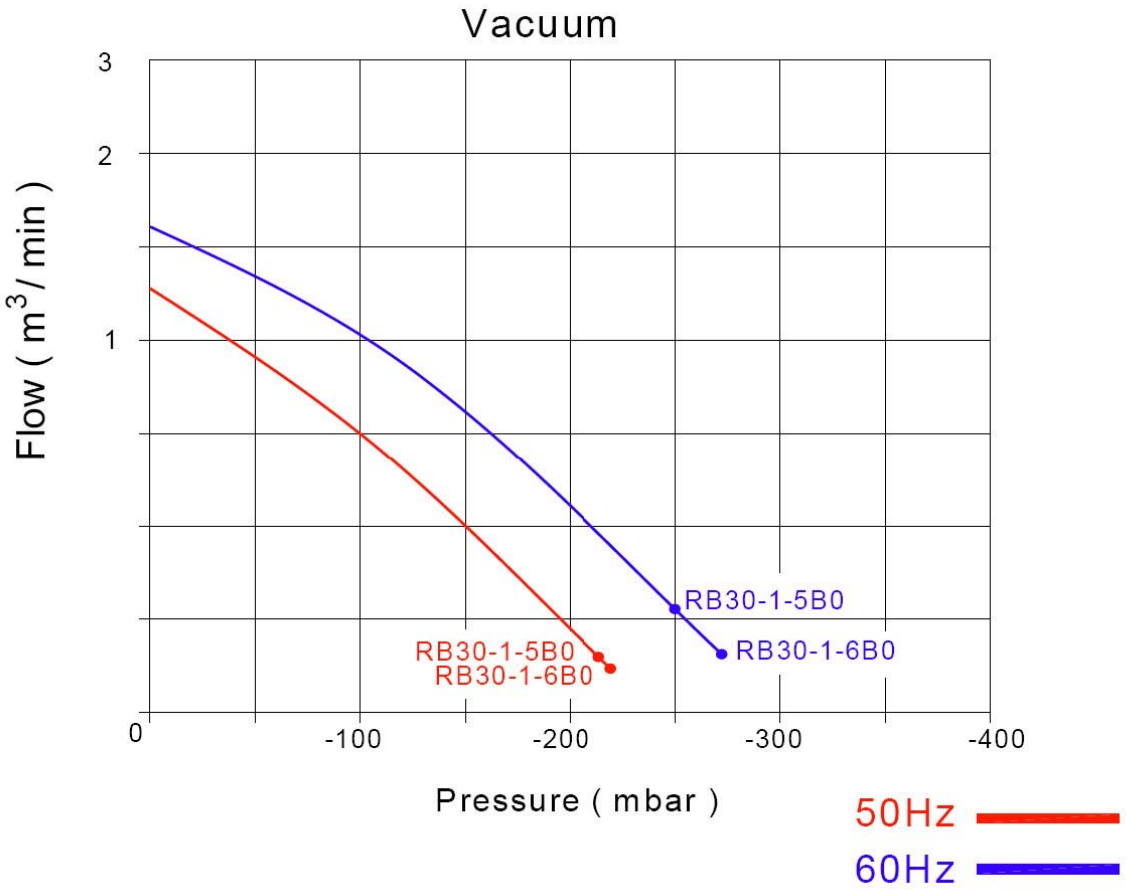
Vacuum
Flow (m3/ min)
3
2
1
0
-100
-200
-300
-400
Pressure (mbar)
RB30-1-5B0
RB30-1-6B0
RB30-1-5B0
RB30-1-6B0
50Hz
60Hz

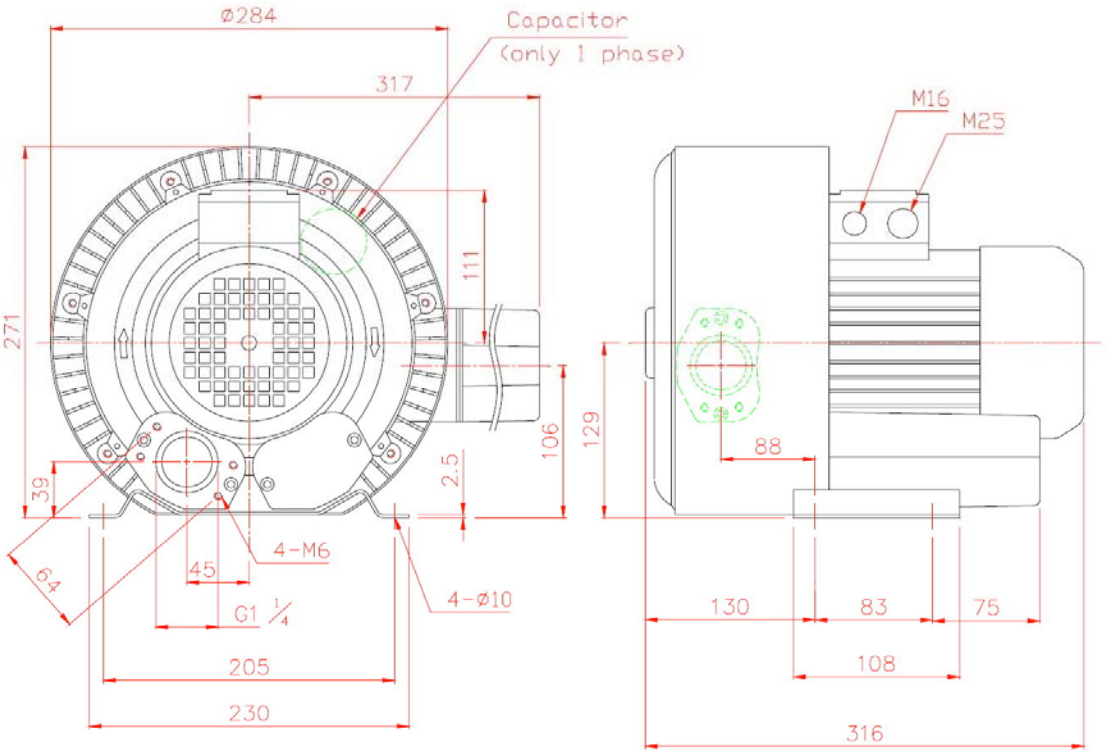
ø284
Capacitor
(only 1 phase)
317
111
271
106
129
2.5
39
64
45
4-M6
G1 1/4
4-ø10
205
230
M16
M25
88
130
83
75
108
316

RB-40-1 2-Stage

1. Casing is made of aluminum alloy and have excellent features on mechanic strength, durability, light weight and smooth exterior.
2. Impeller is made of aluminum alloy and have excellent features on mechanic strength, durability and light weight.
3. RB series Ring Compressors are designed to comply with the safety requirements of CE / c CSA us and have attained their Type Approval.
4. Design per customers requirement available.
5. Thermal protector is optional.

Meet CE Norm	89/336，73/23，EN60204-1，EN50081-2，EN50082-2		
Degree of protection	IP 54 (IP 55 optional)		
Insulation class	F class (155℃)		
Voltage range / Frequency	B	50Hz	200 ~ 240 / 345 ~ 416 V
		60Hz	208 ~ 275 / 380 ~ 480 V
	9	50Hz	1 Phase 104 ~ 127 / 208 ~ 254 V
		60Hz	
Installation	Any aspect.		

Blower 50Hz

Model	Phase	Voltage	Hz	Rated Output kW	Rated CurrentA(*1)	Max. Pressure mbar(*2)	Max. Airflow m^3/min	Noise Level dB(A)(*3)	Weight kg
RB40-1-7B0	3	200 ~ 240△ / 345 ~ 416Y	50	1.6	6.53~7.94△ / 3.8~4.58Y	+280	2.4	73	28
RB40-1-8B0				2.2	8.8~12.8△ / 5~7.35Y	+410			29
RB40-1-790	1	104 ~ 127 / 208 ~ 254		1.5	19.4~23.3 / 9.8~11.7	+260			24.4

- Blower 60Hz

Model	Phase	Voltage	Hz	Rated Output kW	Rated CurrentA(*1)	Max. Pressure mbar(*2)	Max. Airflow m³/min	Noise Level dB(A)(*3)	Weight kg
RB40-1-7B0	3	208 ~ 275△ / 380 ~ 480Y	60	2.05	8.36~7.8△ / 4.6~4.53Y	+310	3.0	76	28
RB40-1-8B0				2.55	10.2~11.5△ / 5.6~6.7Y	+420			29
RB40-1-790	1	104 ~ 127 / 208 ~ 254		1.75	21.9~17.8 / 11.1~8.94	+230			24.4

Remark 1. Under condition (*2), the test value.

Remark 2. Max. pressure for continuous operation permitted.

Remark 3. dB(A) value gets from 4 points & 1 meter distance test.

Remark 4. Can not be operated with closed intake & outlet, a suitable pressure-relief valve must be used

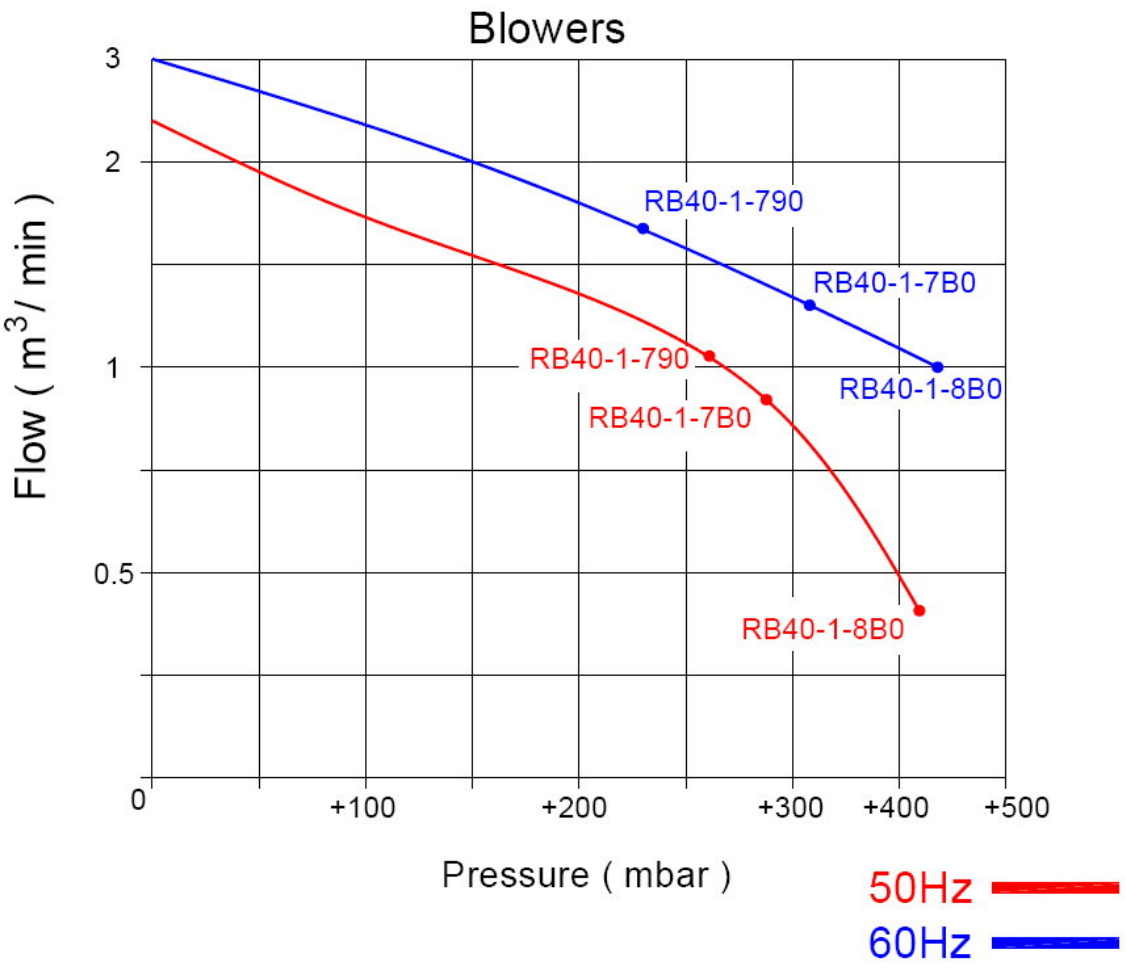

- Vacuum 50Hz

Model	Phase	Voltage	Hz	Rated Output kW	Rated CurrentA(*1)	Max. Pressure mbar(*2)	Max. Airflow m^3/min	Noise Level dB(A)(*3)	Weight kg
RB40-1-7B0	3	200 ~ 240△ / 345 ~ 416Y	50	1.6	6.3~7.8△ / 3.6~4.5Y	-280	2.4	73	28
RB40-1-8B0				2.2	7.6~12.5△ / 4.3~7.2Y	-320			29
RB40-1-790	1	104 ~ 127 / 208 ~ 254		1.5	19.4~23.3 / 9.8~11.7	-280			24.4

- Vacuum 60Hz

Model	Phase	Voltage	Hz	Rated Output kW	Rated CurrentA(*1)	Max. Pressure mbar(*2)	Max. Airflow m^3/min	Noise Level dB(A)(*3)	Weight kg
RB40-1-7B0	3	208 ~ 275△ / 380 ~ 480Y	60	2.05	8~7.6△ / 4.4~4.5Y	-320	3.0	76	28
RB40-1-8B0				2.55	7.6~12.5△ / 4.3~7.2Y	-350			29
RB40-1-790	1	104 ~ 127 / 208 ~ 254		1.75	22.8~17.7 / 11.1~9	-250			24.4

Remark 1. Under condition (*2), the test value.

Remark 2. Max. pressure for continuous operation permitted.

Remark 3. dB(A) value gets from 4 points & 1 meter distance test.

Remark 4. Can not be operated with closed intake & outlet, a suitable pressure-relief valve must be used

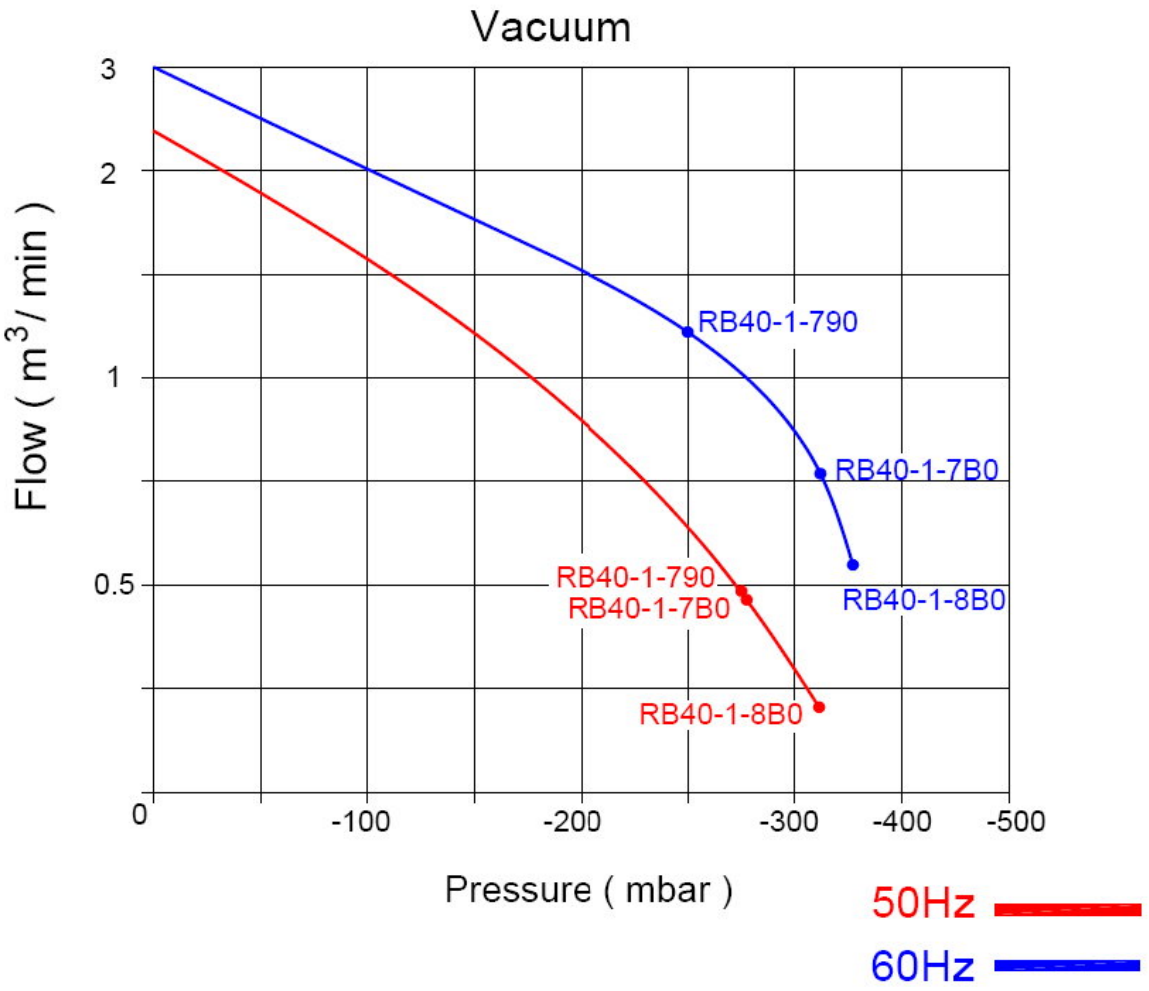
Vacuum
Flow (m3/ min)
3
2
1
0.5
0
-100
-200
-300
-400
-500
Pressure (mbar)
RB40-1-790
RB40-1-7B0
RB40-1-8B0
RB40-1-790
RB40-1-7B0
RB40-1-8B0
50Hz
60Hz

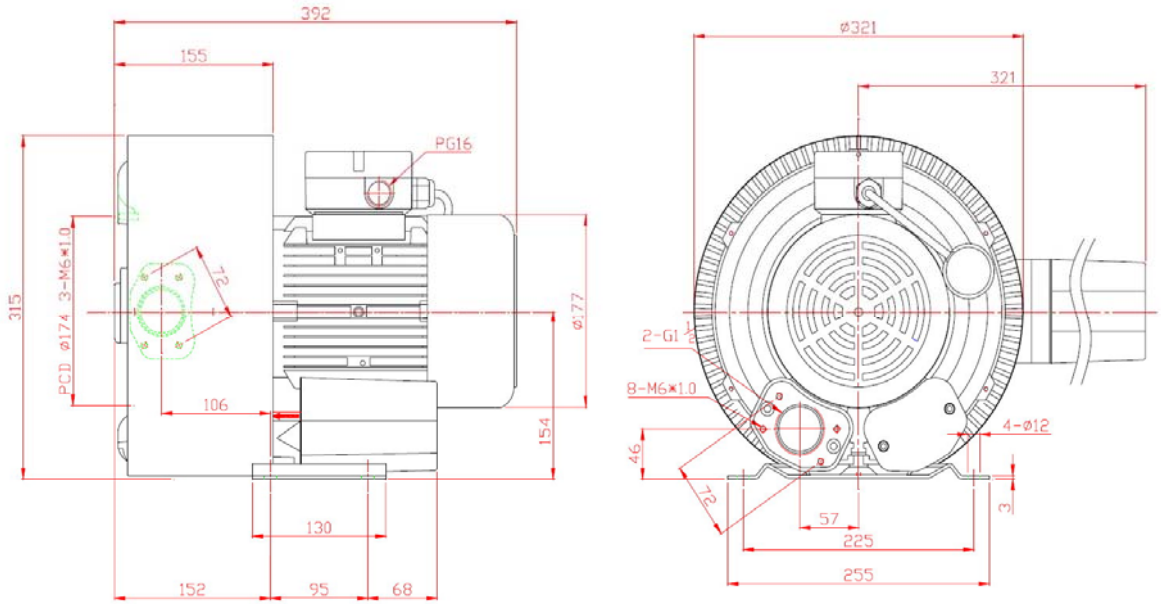
392
155
PG16
315
PCD ø174 3-M6×1.0
72
106
ø177
154
130
152
95
68
ø321
321
2-G1
8-M6×1.0
4-ø12
46
72
57
225
255
3

RB50-1 2-Stage

1. Casing is made of aluminum alloy and have excellent features on mechanic strength, durability, light weight and smooth exterior.
2. Impeller is made of aluminum alloy and have excellent features on mechanic strength, durability and light weight.
3. RB series Ring Compressors are designed to comply with the safety requirements of CE / c CSA us and have attained their Type Approval.
4. Design per customers requirement available.
5. Thermal protector is optional.

Meet CE Norm	89/336，73/23，EN60204-1，EN50081-2，EN50082-2		
Degree of protection	IP 54 (IP 55 optional)		
Insulation class	F class (155℃)		
Voltage range / Frequency	B	50Hz	200 ~ 240 / 345 ~ 416 V
		60Hz	208 ~ 275 / 380 ~ 480 V
Installation	Any aspect.		

Blower 50Hz

Model	Phase	Voltage	Hz	Rated Output kW	Rated CurrentAmps(*1)	Max. Pressure mbar(*2)	Max. Airflow m^3/min	Noise Level dB(A)(*3)	Weight kg
RB50-1-7B0	3	200 ~ 240 / 345 ~ 416	50	3.0	12.2~11.8 / 7.1~6.9	+410	3.8	76	44
RB50-1-8B0				4.0	14.1~15.7 / 8.2~9.1	+490			48

Blower 60Hz

Model	Phase	Voltage	Hz	Rated Output kW	Rated CurrentAmps(*1)	Max. Pressure mbar(*2)	Max. Airflow m^3/min	Noise Level dB(A)(*3)	Weight kg
RB50-1-7B0	3	208 ~ 275 / 380 ~ 480	60	3.45	12.9~11.1 / 7.2~6.6	+360	4.5	77	44
RB50-1-8B0				4.6	16.2~14.8 / 8.8~8.7	+480			48

Remark 1. Under condition (*2), the test value.

Remark 2. Max. pressure for continuous operation permitted.
Remark 3. dB(A) value gets from 4 points & 1 meter distance test.
Remark 4. Can not be operated with closed intake & outlet, a suitable pressure-relief valve must be used.

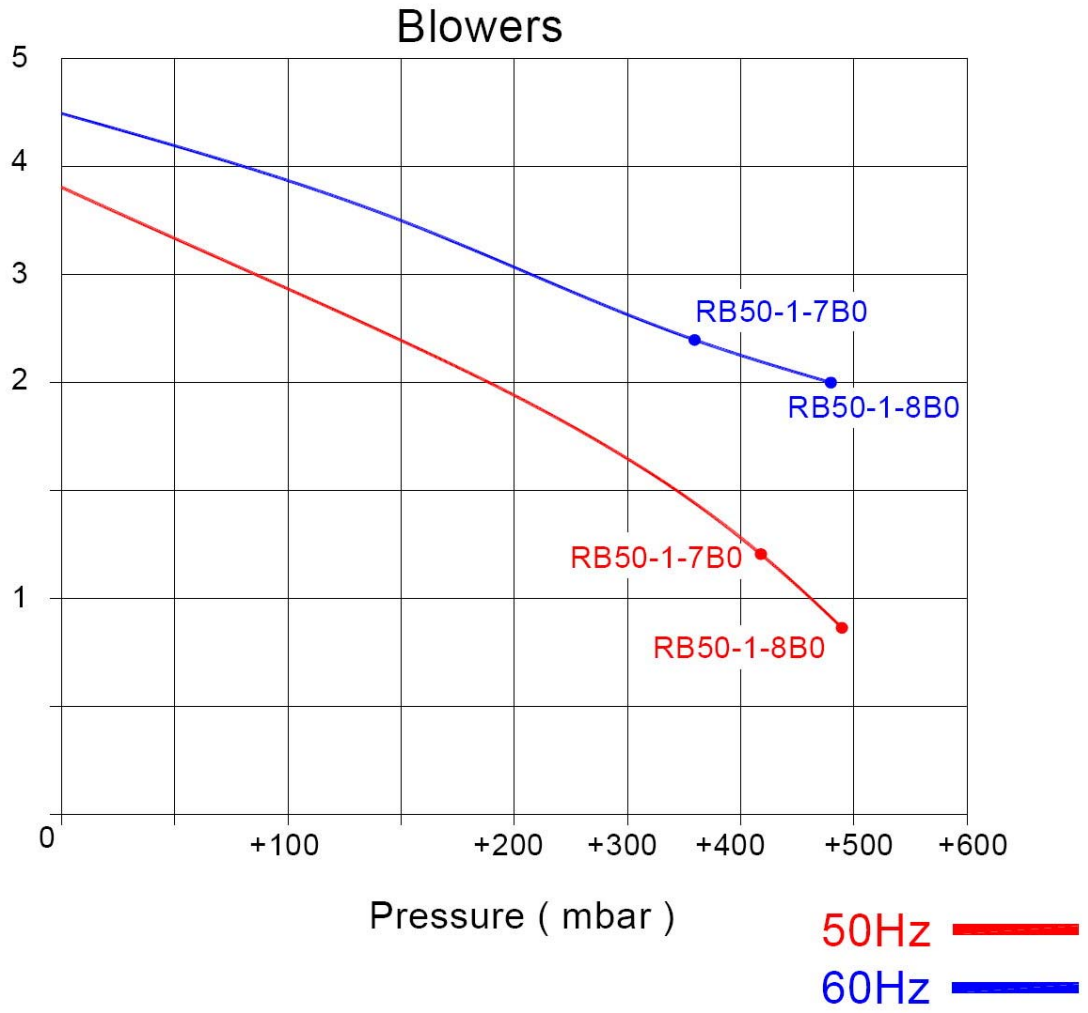

- Vacuum 50Hz

Model	Phase	Voltage	Hz	Rated Output kW	Rated CurrentAmps(*1)	Max. Pressure mbar(*2)	Max. Airflow m^3/min	Noise Level dB(A)(*3)	Weight kg
RB50-1-7B0	3	200 ~ 240 / 345 ~ 416	50	3.0	10.6~11.7 / 6.3~608	-340	3.8	76	44
RB50-1-8B0				4.0	11.5~14.1 / 6.7~8.2	-380			48

Vacuum 60Hz

Model	Phase	Voltage	Hz	Rated Output kW	Rated CurrentAmps(*1)	Max. Pressure mbar(*2)	Max. Airflow m^3/min	Noise Level dB(A)(*3)	Weight kg
RB50-1-7B0	3	208 ~ 275 / 380 ~ 480	60	3.45	12.9~11.8 / 7.4~7	-380	4.5	77	44
RB50-1-8B0				4.6	13.6~13.4 / 7.6~7.9	-410			48

Remark 1. Under condition (*2), the test value.

Remark 2. Max. pressure for continuous operation permitted.

Remark 3. dB(A) value gets from 4 points & 1 meter distance test.

Remark 4. Can not be operated with closed intake & outlet, a suitable pressure-relief valve must be used.

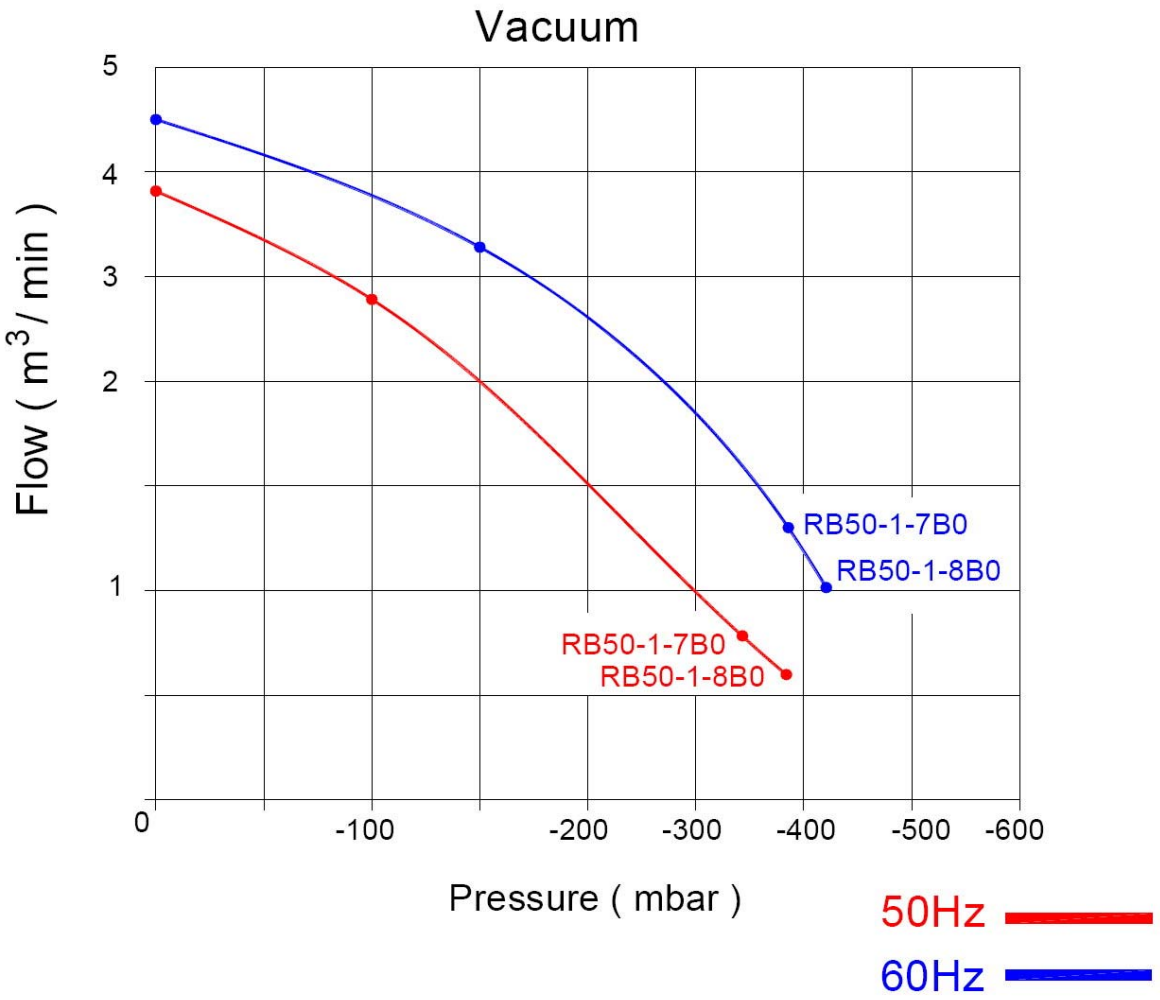

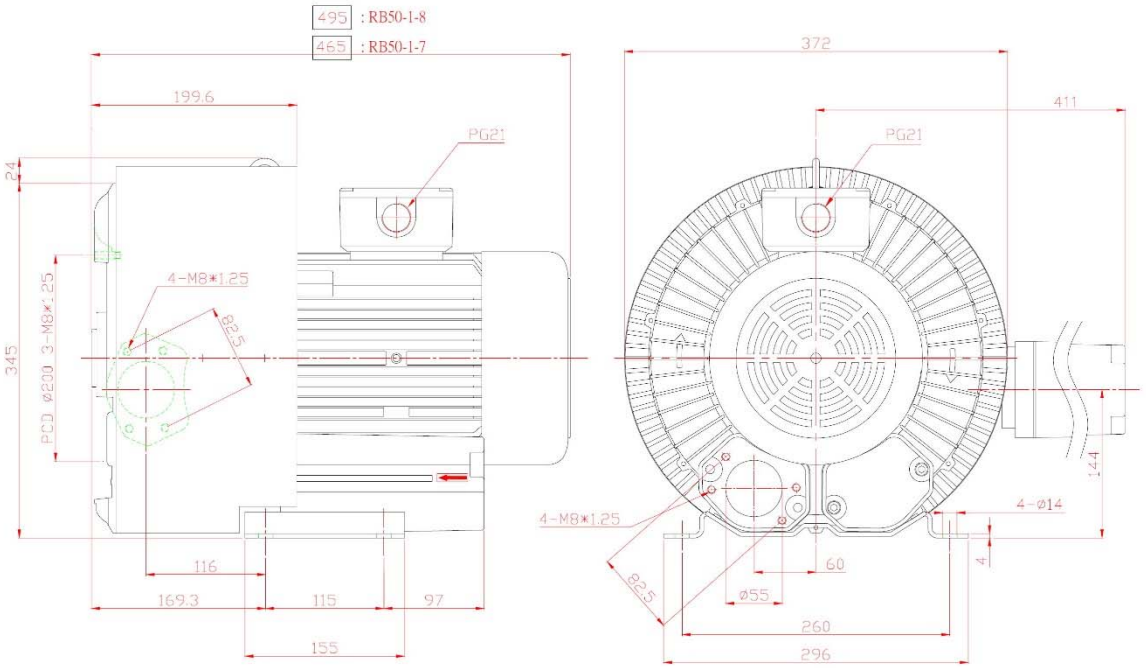
495 : RB50-1-8
465 : RB50-1-7
199.6
24
345
PCD ø200 3-M8×1.25
4-M8*1.25
82.5
PG21
116
169.3
115
97
155
372
411
PG21
144
4-ø14
4
60
ø55
260
296
4-M8*1.25
82.5

RB60-1 2-Stage

1. Casing is made of aluminum alloy and have excellent features on mechanic strength, durability, light weight and smooth exterior.
2. Impeller is made of aluminum alloy and have excellent features on mechanic strength, durability and light weight.
3. RB series ring compressors are designed to comply with the safety requirements of CE / c CSA us and have attained their type approval.
4. Design per customers requirement available.
5. Thermal protector is optional.

Meet CE Norm	89/336，73/23，EN60204-1，EN50081-2，EN50082-2		
Degree of protection	IP 54 (IP 55 optional)		
Insulation class	F class (155 degrees centigrade)		
Voltage range / Frequency	B	50Hz	200 ~ 240△ / 345 ~ 416Y V
		60Hz	208 ~ 275△ / 380 ~ 480Y V
	K	50Hz	345 ~ 415△ / 595 ~ 720Y V
		60Hz	460△ / ------- V
Installation	Any aspect.		

- Blowers with 50 Hz

Model	Phase	Voltage	Hz	kW	Rated Current Amps(*1)	Max. Pressure mbar(*2)	Max. Airflow m^3/min	Noise LeveldB(A)(*3)	Weightkg
RB60-1-5B0	3	200 ~ 240△ / 345 ~ 416 Y	50	2.2	10.8~10 / 6.1~5.8	+210	5.3	77	51
RB60-1-6B0				3.0	12.6~12.1 / 7.4~7.1	+280			52
RB60-1-7B0				4.0	16.2~16.7 / 9.4~9.7	+380			57

RB60-1-8B0				5.5	20.5~20.7 / 11.9~11.7	+500			77
RB60-1-9B0				7.5	23.5~27.9 / 13.6~15.7	+570			80

- Blowers with 60 Hz

Model	Phase	Voltage	Hz	kW	Rated Current Amps(*1)	Max. Pressure mbar(*2)	Max. Airflow m^3/min	Noise LeveldB(A)(*3)	Weightkg
RB60-1-5B0	3	208 ~ 275△ / 380 ~ 480 Y	60	2.55	11.2~9.4 / 6.1~5.4	+150	6.3	81	51
RB60-1-6B0				3.45	12.6~12.1 / 7.4~7.1	+280			52
RB60-1-7B0				4.6	16.2~16.7 / 9.4~9.7	+380			57
RB60-1-8B0				5.5	25.4~21 / 13.8~12.1	+500			77
RB60-1-9B0				8.6	31.3~28.7 / 16.9~16.3	+660			80

Remark 1. under condition (*2) , the test value.

Remark 2. Max. pressure for continuous operation permitted.

Remark 3. dB(A) value gets from 4 points & 1 meter distance test.

Remark 4. can not be operated with closed intake & outlet , a suitable pressure-relief valve must be used.

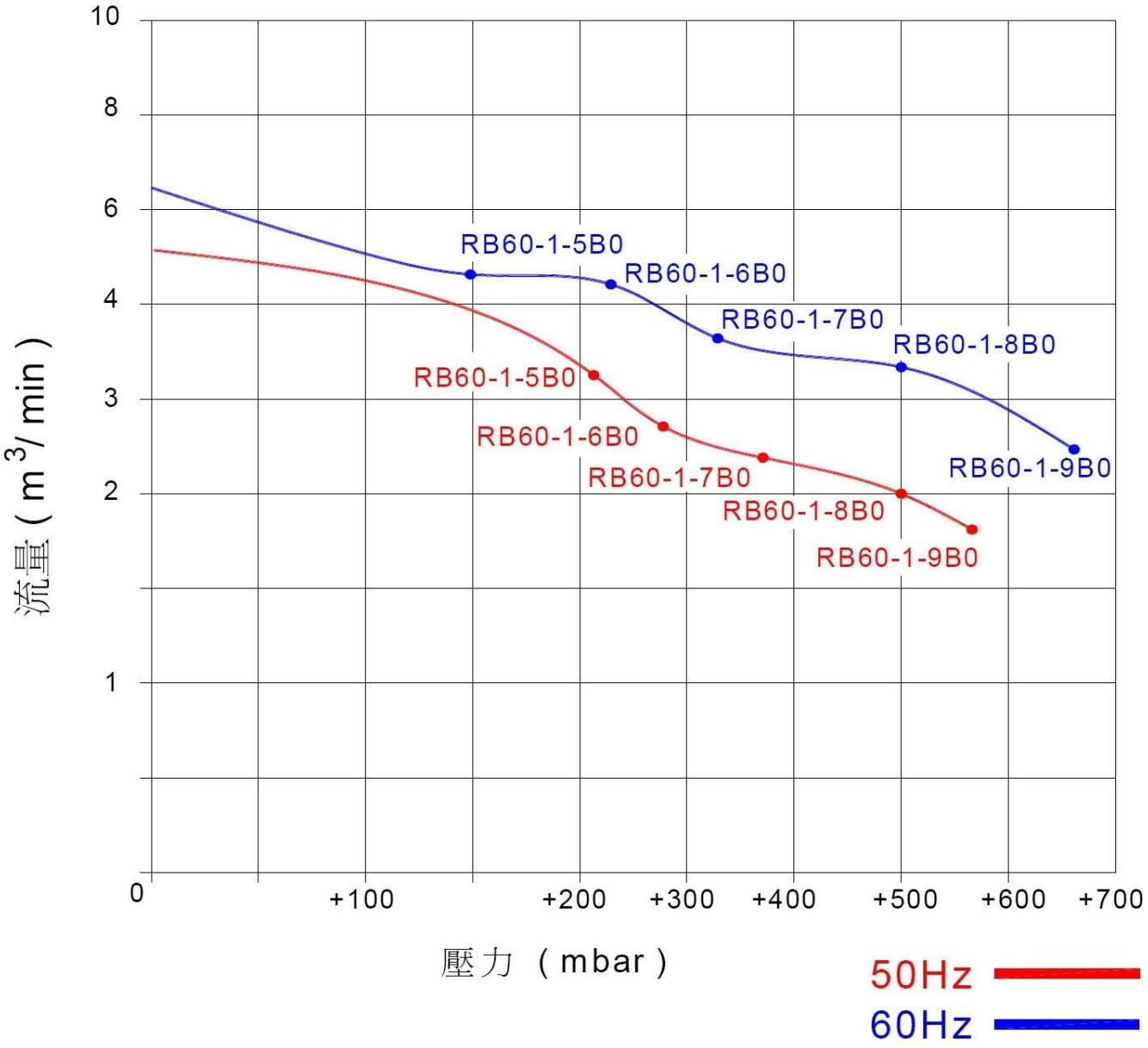

- Vacuum with 50 Hz

Model	Phase	Voltage	Hz	kW	Rated Current Amps(*1)	Max. Pressure mbar(*2)	Max. Airflow m³/min	Noise LeveldB(A)(*3)	Weightkg
RB60-1-5B0	3	200 ~ 240△ / 345 ~ 416 Y	50	2.2	10.3~9.9 / 6.1~5.7	-220	5.3	77	51
RB60-1-6B0				3.0	12.1~11.7 / 7.1~6.8	-280			52
RB60-1-7B0				4.0	15.7~16.4 / 9~9.4	-360			57

RB60-1-8B0				5.5	17.8~18.7 / 10.4~10.7	-440			77
RB60-1-9B0				7.5	18.7~25.1 / 10.7~14.1	-440			80

- Vacuum with 60 Hz

Model	Phase	Voltage	Hz	kW	Rated Current Amps(*1)	Max. Pressure mbar(*2)	Max. Airflow m^3/min	Noise LeveldB(A)(*3)	Weightkg
RB60-1-5B0	3	208 ~ 275△ / 380 ~ 480 Y	60	2.55	11.1~9.2 / 6.1~5.4	-170	6.3	81	51
RB60-1-6B0				3.45	11.8~10.4 / 7~6	-200			52
RB60-1-7B0				4.6	17.8~15.9 / 9.9~9.2	-350			57
RB60-1-8B0				5.5	21.2~18.5 / 11.6~10.7	-440			77
RB60-1-9B0				8.6	21.4~23.5 / 11.8~13.4	-460			80

Remark 1. under condition (*2) , the test value.

Remark 2. Max. pressure for continuous operation permitted.

Remark 3. dB(A) value gets from 4 points & 1 meter distance test.

Remark 4. can not be operated with closed intake & outlet , a suitable pressure-relief valve must be used.

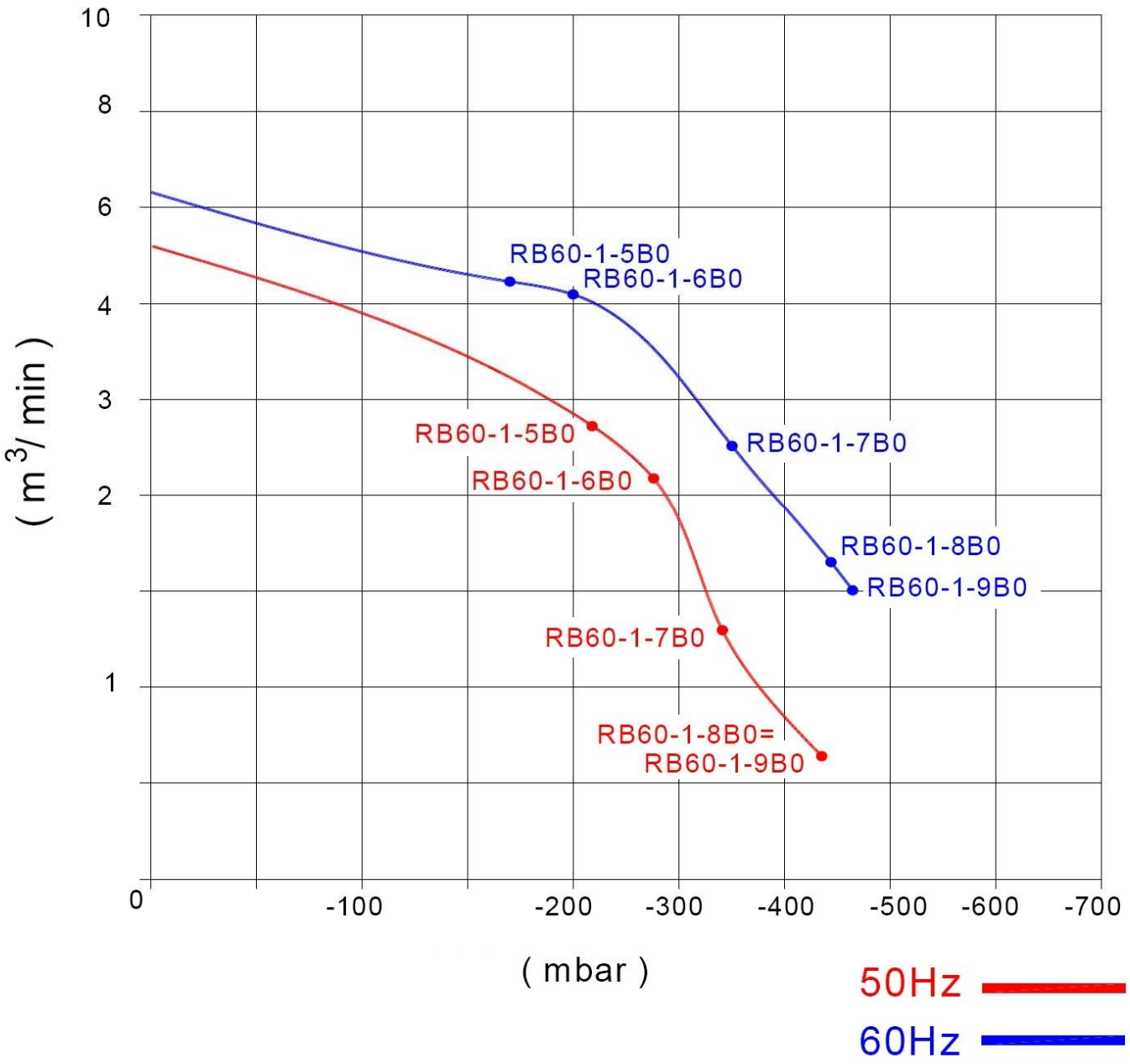
10
8
6
4
3
2
1
0
(m3/ min)
-100
-200
-300
-400
-500
-600
-700
(mbar)
RB60-1-5B0
RB60-1-6B0
RB60-1-7B0
RB60-1-8B0
RB60-1-9B0
RB60-1-5B0
RB60-1-6B0
RB60-1-7B0
RB60-1-8B0=
RB60-1-9B0
50Hz
60Hz

● RB60-1-5xx、RB60-1-6xx

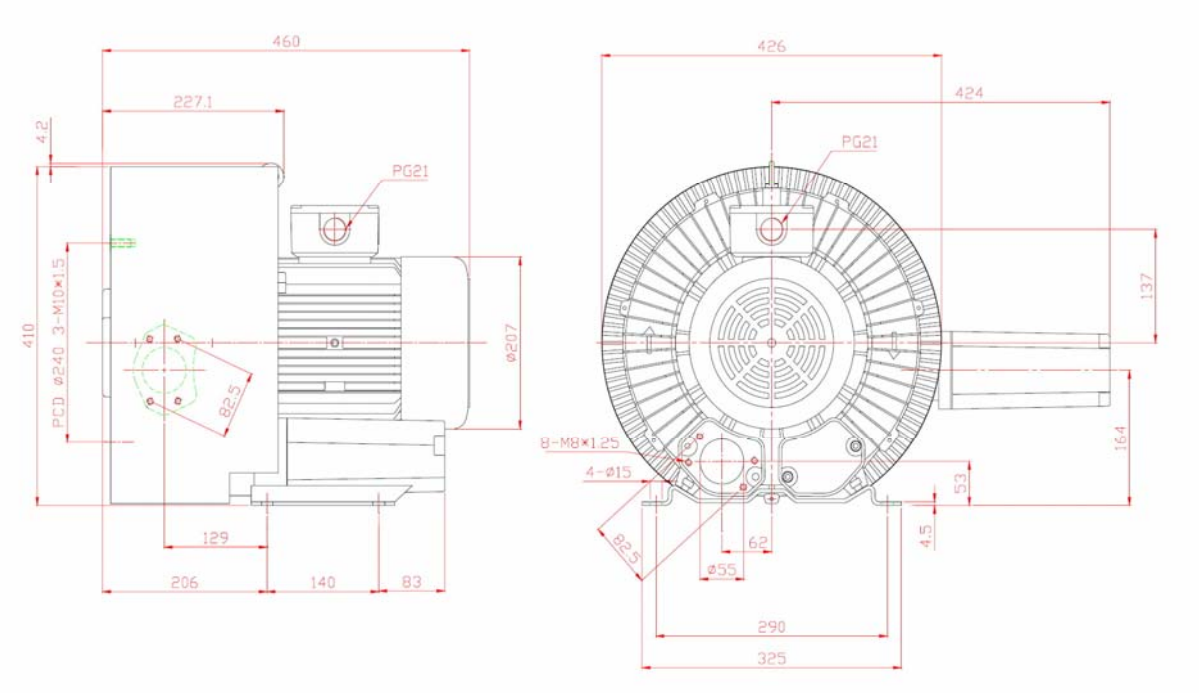

● RB60-1-7xx

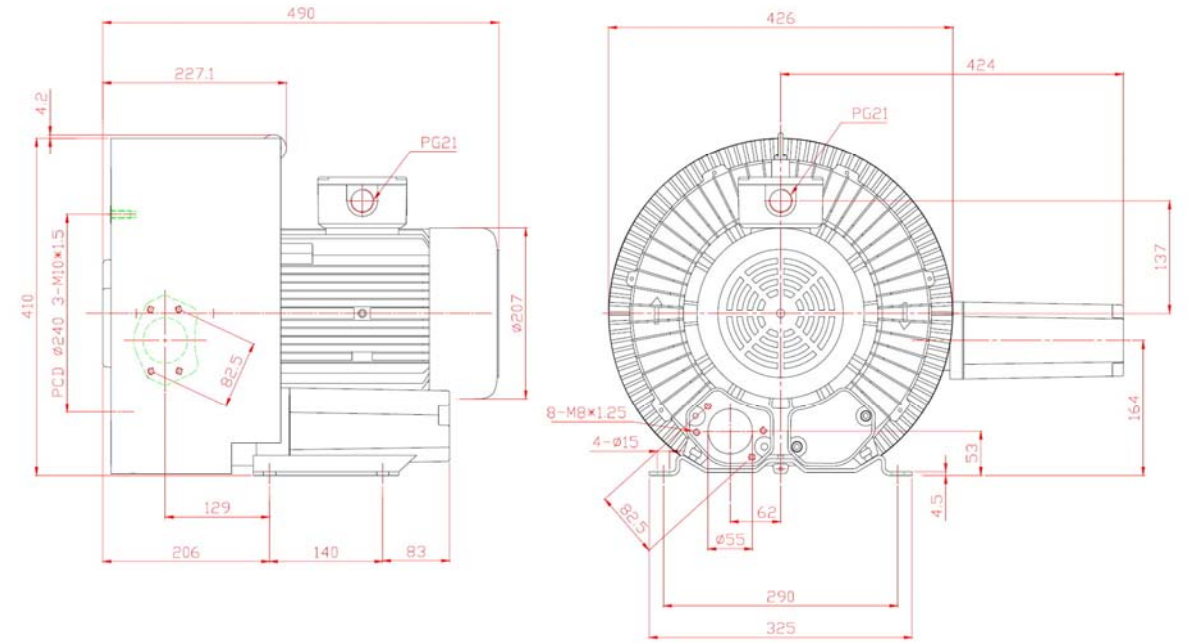

● RB60-1-8xx、RB60-1-9xx

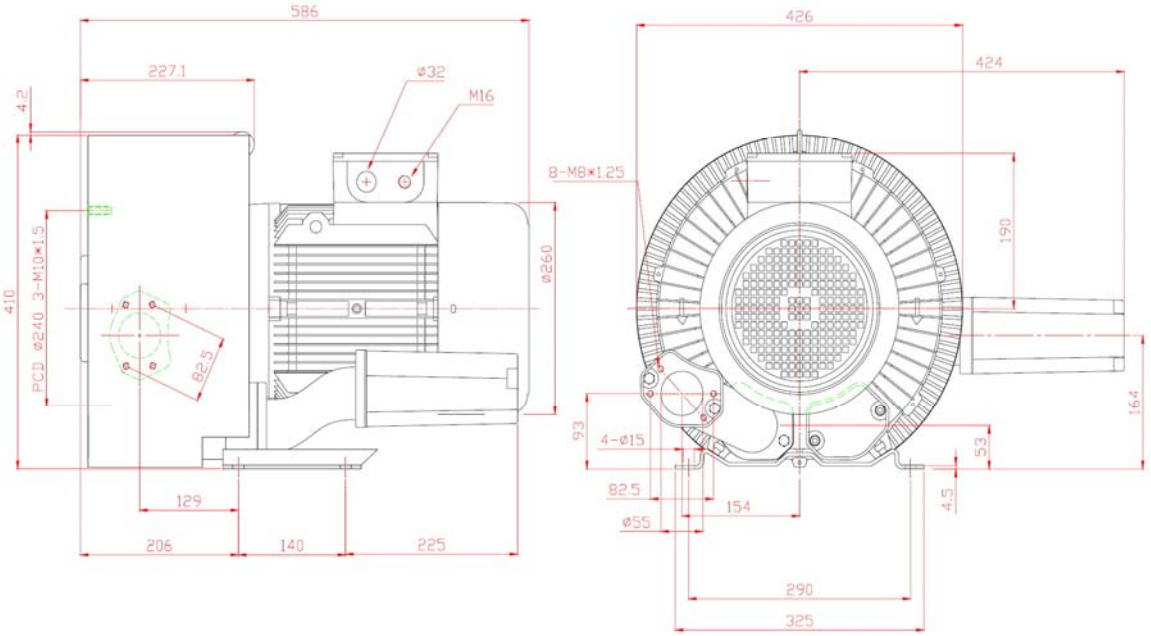

RB80-1 2-Stage

1. Casing is made of aluminum alloy and have excellent features on mechanic strength, durability, light weight and smooth exterior.
2. Impeller is made of aluminum alloy and have excellent features on mechanic strength, durability and light weight.
3. RB series Ring Compressors are designed to comply with the safety requirements of CE have attained their Type Approval.
4. Design per customers requirement available.
5. Thermal protector is optional.

Meet CE Norm	2006/42/EC		
Degree of protection	IP 54 (IP 55 optional)		
Insulation class	F class (155℃)		
Voltage range / Frequency	B	50Hz	200 ~ 240△ / 345 ~ 415Y V
		60Hz	220 ~ 275△ / 380 ~ 480Y V
Installation	Any aspect.		

Blower 50Hz

Model	Phase	Voltage	Hz	Rated Output kW	Rated Current Amps (*1)A(*1)	Max Pressure mbar(*2)	Max Airflow m^3/min	Noise Level dB(A)(*3)	Weight kg
RB80-1-4B0	3	200 ~ 240△ / 345 ~ 415Y	50	7.5	31.5△ / 18.2Y	+350	9.5	76	112
RB80-1-5B0				13	46.8△ / 27.0Y	+600			142
RB80-1-6B0				20	66.7△ / 38.6Y	+700			160

Blower 60Hz

Model	Phase	Voltage	Hz	Rated Output kW	Rated Current Amps (*1)	Max Pressure mbar(*2)	Max Airflow m^3/min	Noise Level dB(A)(*3)	Weight kg
RB80-1-4B0	3	220 ~ 275△ / 380 ~ 480Y	60	8.6	37.1△ / 21.3Y	+290	11.3	81	112
RB80-1-5B0				15	52.0△ / 30.0Y	+600			142
RB80-1-6B0				22	76.0△ / 44.0Y	+780			160

Remark 1. Under condition (*2)，the test value.

Remark 2. Max. pressure for continuous operation permitted.

Remark 3. dB(A) value gets from 4 points & 1.5 meter distance test.

Remark 4. Can not be operated with closed intake & outlet, a suitable pressure-relief valve must be used.

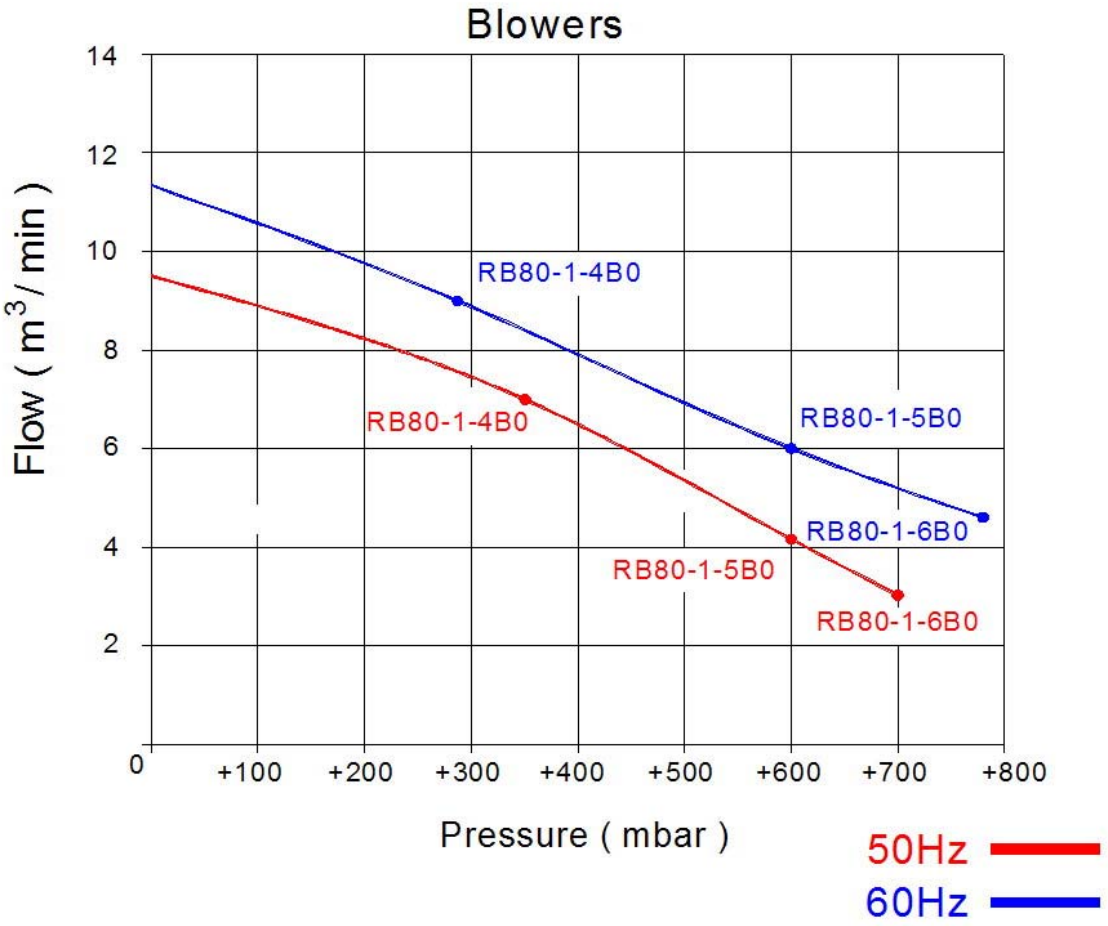

- Vacuum 50Hz

Model	Phase	Voltage	Hz	Rated Output kW	Rated Current Amps (*1)A(*1)	Max Pressure mbar(*2)	Max Airflow m^3/min	Noise Level dB(A)(*3)	Weight kg
RB80-1-4B0	3	200 ~ 240△ / 345 ~ 415Y	50	7.5	31.5△ / 18.2Y	-350	9.5	76	112
RB80-1-5B0				13	46.8△ / 27.0Y	-430			142
RB80-1-6B0				20	66.7△ / 38.6Y	-450			160

- Vacuum 60Hz

Model	Phase	Voltage	Hz	Rated Output kW	Rated Current Amps (*1)A(*1)	Max Pressure mbar(*2)	Max Airflow m^3/min	Noise Level dB(A)(*3)	Weight kg
RB80-1-4B0	3	220 ~ 275△ / 380 ~ 480Y	60	8.6	37.1△ / 21.3Y	-290	11.3	81	112
RB80-1-5B0				15	52.0△ / 30.0Y	-450			142
RB80-1-6B0				22	76.0△ / 44.0Y	-470			160

Remark 1. Under condition (*2)，the test value.

Remark 2. Max. pressure for continuous operation permitted.

Remark 3. dB(A) value gets from 4 points & 1.5 meter distance test.

Remark 4. Can not be operated with closed intake & outlet, a suitable pressure-relief valve must be used.

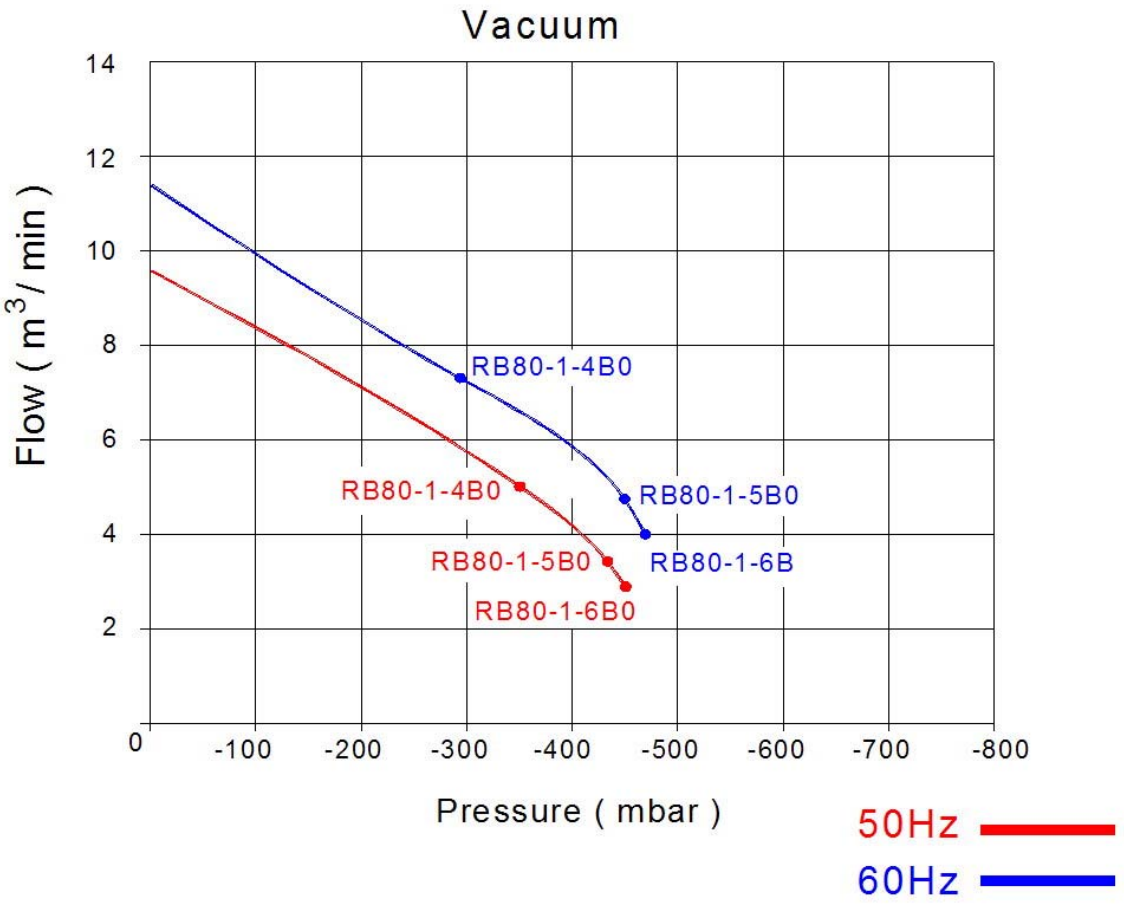
Vacuum
Flow (m3/ min)
14
12
10
8
6
4
2
0
-100
-200
-300
-400
-500
-600
-700
-800
Pressure (mbar)
RB80-1-4B0
RB80-1-5B0
RB80-1-6B
RB80-1-4B0
RB80-1-5B0
RB80-1-6B0
50Hz
60Hz
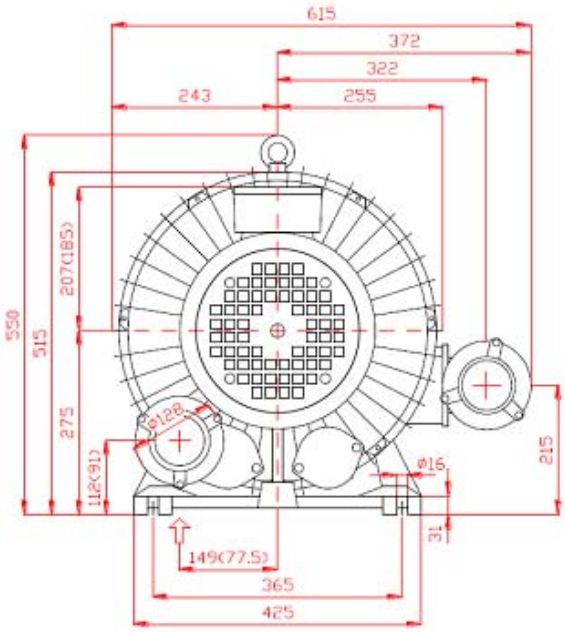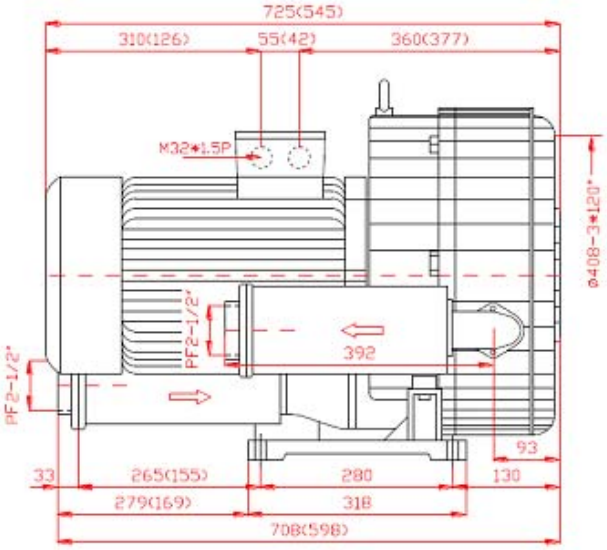
(x..) : FOR RB80-1-4B0 Dim.